SYC SEMICONDUCTORES Y COMPONENTES

PARANA 274
(C1017AAF) BUENOS AIRES
TEL/FAX: 4371-5300 (L.ROT)
www.sycelectronica.com.ar
info@sycelectronica.com.ar

CODIGO	DESCRIPCION
2EHDR-XXP	Enchufable macho a pcb paso .2” 90º de X vias

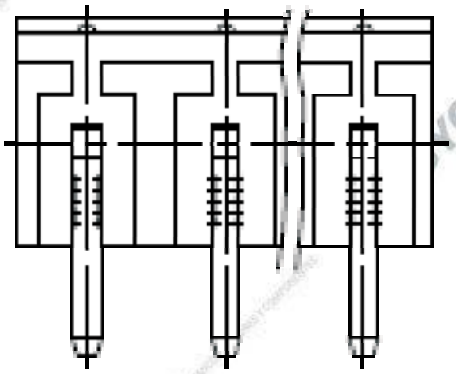

NOTES:

1. Rating: 300V 15A(IEC 250V 12A)
   PITCH: 5.08mm
2. Insulation Withstande Voltage:
   AC 1500V/MIN
3. Insulation Resistance:
   500MΩ or more at DC500V
4. Using Temperature Range:
   -40℃~+105℃
5. Undimensioned Tolerances:

—	⌒	⌀	0.05/10
∥	//	⌓	0.2/10
HTSH Error			0.05/10
[illegible]			[illegible]

6. [illegible]

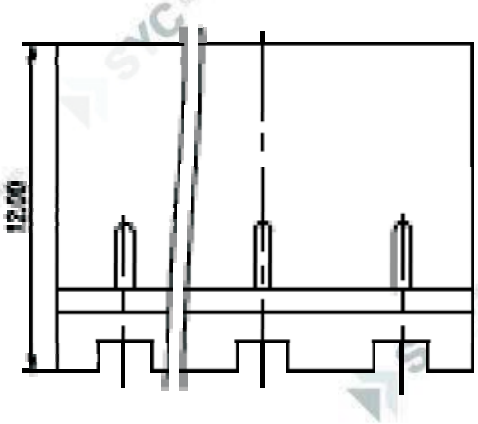

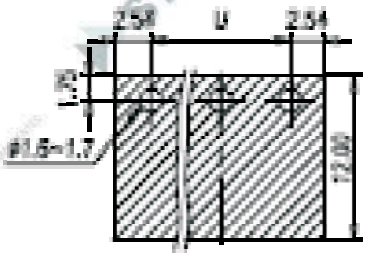

P.C.B. LAYOUT(REF)

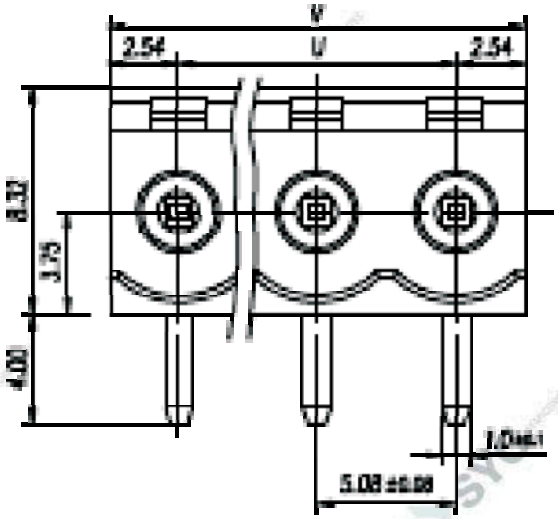

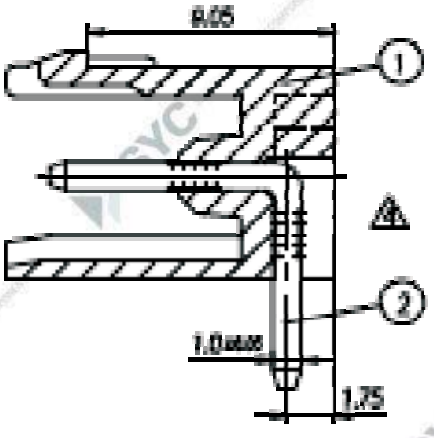

P	2	3	4	5	6	7	8	9	10	11	12	13
U	5.08	10.16	15.24	20.32	25.40	30.48	35.56	40.64	45.72	50.80	55.88	60.96
V	10.16	15.24	20.32	25.40	30.48	35.56	40.64	45.72	50.80	55.88	60.96	66.04
P	14	15	16	17	18	19	20	21	22	23	24	25
U	66.04	71.12	76.20	81.28	86.36	91.44	96.52	101.6	106.68	111.76	116.84	121.92
V	71.12	76.20	81.28	86.36	91.44	96.52	101.6	106.68	111.76	116.84	121.92	127.00

Tolerances for PITCH ERROR